Trade of Sheet Metalwork	
Module 7:	Introduction to CNC Sheet Metal Manufacturing
Unit 2:	CNC Machines
	Phase 2

Table of Contents

List of Figures

List of Tables

Document Release History

Date	Version	Comments
18/01/07	First draft	
09/04/14	2.0	SOLAS transfer

Module 7 – Introduction to CNC Sheet Metal Manufacturing

Unit 2 – CNC Machines

Duration – 3.5 Hours

Learning Outcome:

By the end of this unit each apprentice will be able to:

- Define 'numerical control' and outline the applications for CNC machinery within industry
- State the advantages of CNC machines over NC and conventional machines
- Outline the safety hazards associated with the use of automated industrial equipment

Key Learning Points:

Rk	Definition of 'Numerical Control' (NC) and 'Computerised Numerical Control' (CNC).
Rk	Applications for CNC machinery.
Rk	Advantages of CNC machines over NC and conventional machines.
Rk	Safety hazards using CNC machinery.

Training Resources:

- Access to CNC machinery – Turret Punch, Press Brake and Plasma including CAD/CAM software

Key Learning Points Code:

M = Maths D= Drawing RK = Related Knowledge Sc = Science

P = Personal Skills Sk = Skill H = Hazards

Introduction to CNC Machines

Numerical Control (NC)

NC is a method of giving instructions to a machine in the form of a code.

NC machines do not have memory.

Computer Numerical Control (CNC)

CNC has the same concepts as NC but uses a dedicated computer within the MCU.

Machine Constructional Features

All CNC machines are designed to fulfil three main objectives:

1. To achieve and maintain accuracy.
2. To achieve and maintain repeatability.
3. To achieve and maintain reliability.

Note: CAD/CAM means Computer Aided Design/Computer Aided Manufacture.

Control System Fundamentals

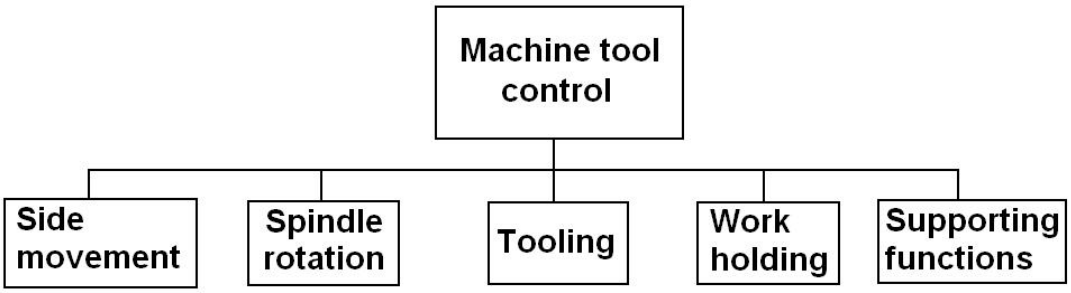

Figure 1 - Control System Fundamentals

Numerically controlled machines often weigh up to 100 tons and yet are required to position a cutting tool with accuracy of the order of 0.002mm. The control system must move the tool at feed rates as high as 8cm/sec while encountering loads which may vary dramatically on a given path. The NC machine must have dynamic response characteristics that enable it to follow intricate contours with a minimum of path error. Clearly, these requirements dictate a control system that is matched to the mechanical characteristics of the machine it drives.

A control system is a combination of devices that regulate an operation by administering the flow of energy and other resources to and from that operation. Essentially, a control system is made up of interrelated subsystems that perform tasks which in orthodox machining processes are managed by an intelligent human operator.

The control systems for NC machines therefore serve to replace the human machine operator and significantly improve upon even the best human performance. A direct analogy can be made between numerical controls and the human operators they replace. Both:

1. Sense the current status of the machine.

2. Make logical decisions which are required to accomplish a task.

3. Communicate decisions to the machine by actuating proper mechanical devices.

4. Have the ability to store information: instructions, data and the results of logical decisions.

In summary, a machine control system is a combination of electronic circuitry, sensing devices and mechanical components which guide the cutting tool along a predefined path.

CNC Fabrication Sheetmetal Work

Basic Components of an NC System

An operational numeric control system consists of the following three basic components:

1. Program of instructions
2. Controller unit, also called the machine control unit (MCU)
3. Machine tool or other controlled process

The general relationship amount the three components is illustrated in Figure 2. The program of instructions serves as the input to the controller unit, which in turn commands the machine tool or other processes to be controlled.

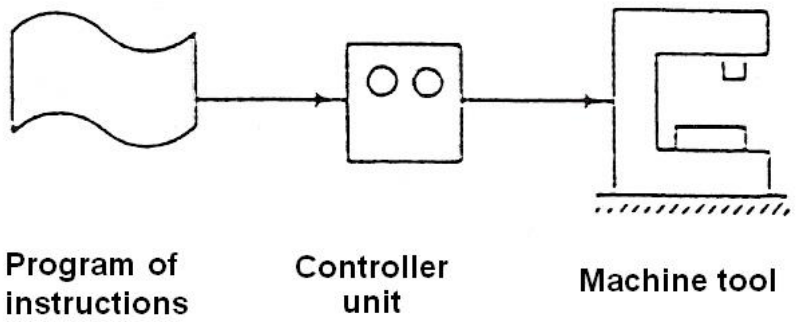

Figure 2 - Three Basic Components of a Numerical Control System

1. Program of instructions

The program of instructions is the detailed step-by-step set of directions which tells the machine tool what to do. It is coded in numerical or symbolic form on some type of input medium that can be interpreted by the controller unit.

2. Controller unit

The second basic component of the NC system is the controller unit. This consists of the electronics and hardware that read and interpret the program of instructions and convert it onto mechanical actions of the machine tool. The typical elements of the controller unit include the tape reader, a data buffer, signal output channels to the machine tool, feedback channels from the machine tool and the sequence controls to coordinate the overall operation of the forgoing elements.

3. Machine Tool

The third basic element of the NC system is the machine tool or other controlled process. It is the part of the NC system which performs the useful work.

Applications

Recent advances in CNC equipment for fabrication sheetmetal work and welding has resulted in an improvement in efficiency, quality and economics. Some of the machines responsible for this change are discussed below.

CNC Guillotines

CNC power guillotines have not altered in size, style of capacity but have been retrofitted with NC or CNC controllers. The control unit along with a more sophisticated back gauge allows for greater accuracy (up to 0.1mm). The controller may have such features as:

1. Programmable time delay
2. Repetitive cutting
3. Touch and cut facility
4. Program storage
5. Programmable plate supports
6. Rapid axis movement
7. Error messages

CNC Flame Cutting

Traditional methods of obtaining shapes, using Profile Cutting machines, require accurate templates to be made of drawings to be produced manually. This could be time consuming along with the problems of allowances and accuracy.

Current CNC machines provide considerable flexibility such as:

1. Accuracy of 0.1mm
2. Programmable kerf/allowances
3. Nesting facilities
4. Standard shapes
5. Construct shapes
6. Nozzle height control
7. Plasma control
8. Programmable pre-heat times

CNC Piercing

Perhaps one of the most spectacular advances is in the preparation of flat blank sheets, where notches, holes of different shapes and sizes and nibbled slots or shapes are required. The use of a multi tool turret (similar to machining centres) has been employed. Large quantities or even "one off" complex shapes may be manufactured using these systems. Not only is production time reduced but also the Down Time along with an accuracy of 0.1mm makes this a desirable machine to have in a modern workshop.

Machine capacities vary from a 15 ton - 15 station machine (which will punch 8mm thick mild steel and has a max diameter of 50mm) to 30/40 ton machines with 72 stations (which have indexing and will punch 10mm thick plate and can have max diameters of).

CNC Pressing

Presses as with CNC guillotines as mentioned earlier haven't altered their physical design, for example machine capacity is still rated in Tons and machines may be "down stroke" or "up stroke" types. Rapid back gauge movement along with a CNC controller however gives for much more accuracy and consistent work. Other important features of the CNC controller on a press may be as follows:

1. Programmable compensation for material tensile strength.
2. Programmable accurate incremental bending.
3. Accuracies of 1.0mm can be obtained of the bent length.
4. Step mode checking.

CNC Laser Operations/Plasma Operations

As the processes of laser cutting and welding are developed further, savings may be made in the production of components manufactured from materials such as aluminium and stainless steel. The process is capable of great accuracy and cleanliness of cut; this coupled with the low distortion and very little waste make the process very desirable.

Assembly & Welding

Where components are required to be assembled or offered to a machine (Machine loading) within a flat plane (i.e. using X & Y coordinates) various CNC assembly machines could be employed. However, in recent years robots have been developed for not only material handling but also welding. If various jigs, fixtures and manipulators are employed with robots then both spot welding and Metal Arc Gas Shielded (MAGS) processes can be used very successfully.

The future of CNC does not stop here, other areas which may be involved in the fabrication sheetmetal work and welding industries could be:

a) Inspection, measurement and quality control

b) Flexibility Manufacturing Systems (FMS)

Advantages and Disadvantages

Numerically controlled machine tools are more expensive than conventional machines of equivalent size and type. The control system itself is costly and the more axes that need to be controlled the dearer the machine becomes.

It also follows that the more complex the machine the more need for adequate training, thus requiring more time and expense. The comparison of Advantages and Disadvantages between "conventional" machines and "CNC" machines is quite involved. The following are just pointers which may highlight some topical areas.

1. **Reduced lead time** is the between receiving the design or drawing and manufacture of the component.
2. **Reduced Operator error** due to controlled instructions using "'off line" checking and the various inbuilt safety devices.
3. **Operator Activity** will differ in that if boredom were a problem it would not affect the production of the component. Also in some cases it may be possible for the operator to use workstations. This latter point would also reduce labour costs.
4. **Longer tool life** since speeds and feeds are controlled by the program.
5. **Special fixtures** such as jigs etc. are eliminated, storage of jigs for repeat orders is not now necessary.
6. **Inspection** times are reduced due to the repetitive accuracy of CNC machines.
7. **Scrap** material may be reduced due to "off-line" programming where involved shapes may be nested using the computer to give maximum efficiency of plate use.
8. **Costing** may be done more effectively since the CNC operations are managed away from the shop door.

The advantages and disadvantages of CNC machines will also vary with the different types of firm and the type of work that firm encounter. The types of firm within the sheetmetal, fabrication and welding industry may range from:

(a) Small "one off" jobbing firms with only one or two CNC machines.

(b) Firms with "batch production" work with only one or two CNC machines.

(c) Firms with "mass production" work fully CNC equipped.

CNC Machine

Constructions details which makes a CNC machine different to a conventional one:

1. Servo motors;

2. Encoders (electro mechanical rather than mechanical system which brings down the RAM).

3. Transducers (feed back devices).

Advantages of CNC over conventional machines:

1. Quicker;

2. Less time to set up;

3. More conformity;

4. Better accuracy;

5. Better job done;

6. Cheaper labour;

7. Wider variety of work;

8. Off-line programming (computer away from machine);

9. Multi set-ups (different tools in machine at same time);

10. Production increased;

11. Reduced cost of components;

12. Turnaround is faster;

13. Reduced lead time (non-production).

14. Changes in component design is easier.

Safety

Conventional sheetmetal machines are dangerous and CNC machines are no different.

The Press Brake is one of the most dangerous sheetmetal machines both CNC and conventional. The turret punch is a much safer machine to use yet still there are dangers present.

Pressure mats and/or light barriers should be present and turned on. All moving parts are removed from possible contact with the operator. The work-piece moves around and care is needed at some stages in the operation.

It is important not to exceed the capacity of the machine and use correct clearances when installing tooling.

Hazards:

- Noise level
- Moving parts
- Loading and unloading
- Tooling condition

CNC Safety on Press Brakes

- Setting software limit switches protects tools so that incorrect operations of the control system do not cause damage.
- An awareness that the positioning of machine axes takes place very quickly both large and small displacements.
- Always make use of a dry run to prove a program prior to production.
- Be familiar with false sequences, where the axis move, but the ram does not make a stroke. Particularly important on the R-axis.
- The mute point: the setting of daylight between the punch and die, 6.0mm.
- Mute point, awareness of the transition from falling speed to working speed when ram is lowered. This applies to the cycle mode in particular.
- Always check the condition of tooling prior to use.
- Ensure correct alignment of tooling.
- Be aware of the adjustment of the following:
  1. Top dead point
  2. Bottom dead point
  3. Brake point
  4. Mute point
  5. Retract of back gauge
- Protect equipment, i.e. side guards, rear guards, these should be interlocked.
- Be aware of personal protection – safety equipment.
- Safe methods of handling and stacking of workpieces.
- Back up of part programs.
- The setting of waiting time between two program sequences, to avoid collision between tooling and work pieces.
- The installation of the tooling as listed in the program.
- An awareness of the reduction in the operator sense of feel and the lack of direct manual control.
- Be aware of the movement of workpieces when folding.
- Don’t be distracted when working on machines.
- Never eliminate or bypass any safety devices on the machine.
- When tool changing:
  1. Ensure the tooling is closed.
  2. Motor is switched off.

Self Assessment

Questions on Background Notes – Module 7.Unit 2

1. What do we mean by the terms NC and CNC?

2. List three machines which have CNC.

3. Give three advantages of CNC over conventional machines.

4. List four items in relation to safety for a CNC break press.

Answers to Questions 1-4. Module 7.Unit 2

1.

NC is a method of giving instructions to a machine in the form of a code. NC machines have no memory.

CNC (computer numerical control) has the same concepts as NC but uses a dedicated computer within the MCU

2.

CNC Guillotines
Profile Cutters
Press Brakes

3.

Advantages of CNC:

- Reduced lead time.
- Reduced operator error.
- Longer tool life.
- Special fixtures such as jigs can be eliminated.
- Inspection times are reduced.

4.

Safety – CNC Break Press:

Pressure mats, light guards, all moving parts are removed from contact with the operator.

Take care of the workpiece moving.

Index

A

C

I

S